Grupa LOTOS S.A.	**TECHNICAL SPECIFICATION**	Spec. No 2120
	Flue Gas Stacks, Ducts, Measurement and Monitoring Nozzles	

Contents

1 Subject of specification 2
2 Scope of validity 2
2.1 Deviations 2
2.2 Order of Precedence 2
3 Stacks 3
3.1 Construction and arrangement 3
3.2 Stacks design 3
3.3 Platforms and ladders 5
3.4 Aircraft warning lights and special painting 5
4 Flue gas ducts 6
5 Instrument nozzles 6
6 Measuring points for emission control 6
6.1 Measuring points location 6
6.2 Sampling nozzle 7
6.3 General safety rules. 7
7 Prefabrication and Erection 8
8 Inspection 8
8.1 Design Check 9
8.2 Rejection 9
9 Painting and Temporary Corrosion protection 9
10 Documentation 9
11 Relevant documentation 9
12 Norms and standards 10
13 Attachment 11
14 Record of changes 12

This document is the property of Grupa LOTOS SA.. Coping and giving it to other are forbidden without express written authority by Grupa LOTOS SA

1 Subject of specification

This specification and other documents referenced herein establish the minimum requirements for the design, fabrication, erection,and inspection for stacks and ducts.

.

2 Scope of validity

This specification applies to the preparation of tender documents, inquiries and contracts for newly planned investment or modernization projects of Grupa LOTOS S.A.

It shall also be a basis for preparing both detailed specifications and inquiries for individual or package unit supplies.

2.1 Deviations

Any deviation from this specification and the relevant specifications, standards and related documents including proposals, which the bidder claims to be economically and / or technically superior solutions must be submitted in writing for review and approval by Grupa LOTOS S.A. Non-approved exceptions are not acceptable by Grupa LOTOS S.A.

The supplier must report in writing any ambiguity in this or any other specifications of Grupa LOTOS S.A. or non-compliance with the referred documents / standards and obtain a written explanation from Grupa LOTOS S.A.

2.2 Order of Precedence

In case of conflicts existing between this specification and other documents, the following order of precedence shall govern:

- The current Polish legislation
- Terms of purchase order / contract and other requirements agreed in writing Grupa LOTOS S.A.
- Data Sheets approved by Grupa LOTOS S.A.
- This specification
- Other Specifications
- Drawings and other documents
- Standards

3 Stacks

3.1 Construction and arrangement

3.1.1 Ground supported stacks

If height of the stack will be taller than 80 m, concrete construction of the stack shall be considered. Below this height steel stack shall be provided.

3.1.2 Top supported stacks

This type of stacks shall be made of steel with castable refractory lining

Maximum allowed height of the top supported stack should not exceed 60 m.

Above this height ground supported stack is recommended.

Multiple, top supported stacks for one heater are not recommended.

3.1.3 Common stack

Either top or ground supported stacks may be used to serve several heaters/boilers. In this case special provision shall be made to isolate single heater/boiler or from the operating units by guillotine dampers in the ducting for maintenance reasons. If common stack is serving a several heaters, which due to process requirements can operate only all together, guillotine dampers are not required.

Common stack height calculation based on required draft, shall be determined by the heater with the highest pressure drop.

3.2 Stacks design

3.2.1 General requirements

The steel stack shall be designed and fabricated according to PN-EN 13084, PN-EN 1993-3-3 and PN-B-03004:1988P.

Lightning protection shall be provided for the stack according to standard No.4500.

3.2.2 Static calculation

The stack shall meet the requirements of the Polish building regulations and above mentioned standards. State Authorized Civil Engineer verification of the stack structure calculations is obligatory prior to installation and operating in Poland.

Wind loads shall be calculated according to the Polish regulations.

Static calculations shall include checking of the vibration caused by gusts and whirlwind and vibration influence on the structure in case of top supported stack.

The stack lining weight shall be taken into account in the calculations of the critical wind velocity and of the damping of vibrations.

If necessary suitable solution like Karman's vortex breaker or oscillation damper shall be provided to minimize the effect and amplitude of vibrations.

The deflection of the top of the stack shall not exceed values given in above mentioned standards.

3.2.3 Stack diameter selection

Stack tip diameter shall be based on a minimum exit velocity of 10 m/s at the design capacity of the connected unit.

To avoid inversion effect, stack gases velocity shall not be less than 4.5 m/s at the lowest expected capacity.

Wherever possible a uniform diameter should be considered on the entire length of the stack.

Top supported heater stack diameter should be no grater than outside width of the convection section if flue gases entering directly.

If flue gases enter the stack from take off ducts the stack diameter may be slightly grater than the outside width of the convection section.

3.2.4 Mechanical design of the steel stack

Refractory lined stacks shall be made of carbon steel. Single shell unlined stack shall be made form corrosion resistant steel. In case of double shell stack outside supporting shell, shall be made of carbon steel.

A corrosion allowance shall be based on the operating temperature, the type of flue gases as well as the humidity and corrosive action of the atmosphere. The corrosion allowance shall be minimum 3 mm for unlined parts and 1.5 mm for refractory lined parts.

Minimum plate thickness of the stack shall be 8 mm.

Stack erected on foundations shall be equipped with a cleaning and inspection door (min. 600 mm x 600 mm). The upper part of the foundation shall be protected for to avoid calcinations and corrosion of the foundation concrete. Suitable drain with piping up to ground level shall be provided.

Refractory concrete lining shall be securely attached to stack casing and its thickness shall not be less than 50mm. The type of refractory lining shall be specified, taking into account the temperature and corrosives of the flue gases.

Double shell stack liner shall be made of acid resistant material suitable for temperature and corrosives of the flue gases. Liner guides shall be designed to allow free thermal expansion and galvanic separation from outer shell in case of galvanic corrosion risk.

Special attention shall be put on nozzles design in double shell stack and their thermal movement due to temperature difference between shells.

Welds shall be continuous. Stack shall be butt welded without interfere with the openings and nozzles.

Welding procedures shall be established according to relevant codes and submitted for the Grupa LOTOS S.A. approval.

3.2.5 Concrete stack design

Concrete stacks shall consist of a single block concrete section.

Concrete section shall be protected by a brick refractory lining of refractory. Bricks shall be supported at least on each 10 meters. Support rings shall be attached to the concrete section.

Stack supplier shall agree with Grupa LOTOS S.A. detail of the stack construction and materials selection.

Access and cleaning door with minimum size 2 square meters shall be provided.

The upper part of the foundation shall be refractory protected for to avoid calcinations and corrosion of the foundation concrete. Suitable drain with piping up to ground level shall be provided.

The stack supplier is fully responsible for design and erection of the entire stack together with foundation.

3.3 Platforms and ladders

For ground supported stacks, one ladder with a safety cage and rest platforms every 15 ÷ 20 m shall be provided. Access ladder should begin 3 meters above ground level and leads to the top.

The ladder has to be placed from a leeward side of the stack in relation to the heavy wind.

The ladder minimal dimensions are:

- Inside width 300 mm
- Distance from outside surface of the stack 150 mm
- Diameter of the rungs 20 mm
- Rungs spacing no more than 300 mm
- Rest platform dimension 300x 400 mm

Ladder has to be fixed every 2,5 ÷ 4,0 m to the stack construction.

Ladder guards have to be hoop type with spacing 1,0 ÷ 1,5 m and joint together with 3 vertical flat bars (min. cross section 5 x 50 mm) placed evenly around the periphery. Radius of the hoop guard has to be 350 ÷ 400 mm and distance from the ladder to the farthest point of guard about 700 mm.

The upper platform shall be provided if aircraft warning lights will be installed.

The platform shall be located 2.0 m below the top of the stack and shall be max 1.0 m wide. Height of the railings shall be 1.1 m.

3.4 Aircraft warning lights and special painting

All stack taller, than 100 meters shall be equipped with aircraft warning lights and shall be coated in red and white strips according to relevant standard.

Stacks with height below 100 meters may be equipped with aircraft warning lights and special marks if required by Air Ports Authority or Air Force Command.

4 Flue gas ducts

The flow surface of the flue gas ducts shall be selected for flue gas velocity of approx. 8-10 m/s for natural draft and max. 12 m/s for forced draft, during furnace/boiler operation at 120% of design load with 50% of excess air.

Flue ducts shall be made of reinforced steel plates with a minimum thickness of 5 mm.

Thicker plates shall be selected based on unsupported length of duct.

Ducts shall be protected internally, by minimum 50 mm thick refractory lining securely attached to the steel casing.

A bellow shall be provided if required to allow for expansion of the flue duct and movement of the stack.

Access doors shall be provided for inspection and maintenance of each duct section. Sufficient number of cut-off devices like guillotine dampers etc. shall be provided for maintenance work during alternate heaters/boilers shut-down.

5 Instrument nozzles

If specified in purchase order nozzles for instruments connection like analyzers, temperature and pressure measurement shall be provided.

6 Measuring points for emission control

6.1 Measuring points location

The point to take samples of effluent gases should be located on a straight, free of obstacles section of the emitter or channel where measured cross section area can be determined.

The cross section area in the sampling point should be perpendicular to channel axis. It is required that this cross section be on straight line having constant hydraulic diameter, without flow obstacles. If possible, it should be on vertical line >= 5DH upstream and >= 2DH downstream the measuring cross section.

If that is not possible, the minimum values given below should be taken for straight channel or stack sections:

Type of flow obstacle upstream measuring point	Minimum straight line length	
	Upstream	Downstream
Elbows, branch etc.	**1 D_H**	**1 D_H**
Throttled dampers or register	**3 D_H**	**1 D_H**
Fan outlet	**4 D_H**	**1 D_H**

For a circular channels and piping the hydraulic diameter is equal to pipeline diameter.

For other cross sectional shapes the hydraulic diameter is calculated:

$$D_H = \frac{4A}{O}$$

A – channel cross section area [m^2]

O – channel circumference [m]

6.2 Sampling nozzle

Sampling nozzle detail shown in attachment 1 is dedicated for refractory lined stacks. For other stack type nozzles can vary from it, but shall in general follow intention of this design and allow free probe insert.

For circular emitter (stack) two openings must be performed and the nozzles are to be welded in one plane at 90° angle as shown in attachment No.2.

For rectangular channels the number of measuring points installed depends on channel cross sectional area. The measuring points for rectangular channels should be installed on the one channel side:

Channel cross section area	No of nozzles
A < 0.09 m^2	1
0.09 m^2 < A < 0.38 m^2	2
0.38 m^2 < A < 1.50 m^2	3
1.50 m^2 < A	4

Where A is channel cross-section area (see details in attachment 3).

Placement of measurement points on made of brick or concrete emitters should be agreed with local authorities responsible for environment protection.

Access has to be provided to the measuring points and there has to be possibility to insert measuring tube length of 0.5 m longer than hydraulic diameter.

Power supply socket 230VAC has to be installed in platform near the above mentioned measuring points.

6.3 General safety rules.

Safe access shall be provided to each measuring point. The service platform area should be not less than 4 m2, width not less than 1,2 m.

The strength of the service platform supporting structure should be enough to carry load of minimum 600 kg and ensure comfortable operation of two (2) persons.

7 Prefabrication and Erection

The steel stack and flue gas ducts shall be delivered to the site as a prefabricated elements assembled to a maximum degree allowed by transport conditions and lifting possibility.

Manufacturing tolerances shall follow PN-EN 1090-1,2 code requirements

The maximum deviation from a straight line measured over any length of 3 m shall be less than 3 mm. Maximum vertical deviation shall not exceed 30 mm for stack height H<=50m and 0,0006H for stacks higher than 50 meters.

All delivered elements shall have unequivocal marking allowing for their identification at site.

Steel stack pre assembly in the workshop is obligatory.

8 Inspection

The Inspection and Test Plan (ITP) shall be completed and submitted to Grupa LOTOS S.A. for fixing the notification, review, witness and hold points.

The Manufacturer/Supplier will grant for Grupa LOTOS S.A. representatives unrestricted access to all steps of fabrication and testing in own or his sub-suppliers shops and laboratories.

The Manufacturer/Supplier and his sub-suppliers will provide free of charge the necessary assistance for Grupa LOTOS S.A. inspection as manpower, tools, instruments, cranage etc.

All parts presented for the inspection shall be subject of a previous dimensional check by the Manufacturer/Supplier. The manufacturer shall prepare a dimensional record indicating the actual dimensions of each and submit it to Grupa LOTOS S.A. before inspection. Any deviations from the specified tolerances shall be clearly marked in this record for clarification.

The parts made available for the inspection shall be free from slag, dirt, oil, welding spatter and other foreign matter.

No protection paint or other filling shall be applied before the equipment has been inspected tested and approved

All loose components included in the scope of supply shall be kept ready for the inspection before dispatch.

Inspection by Grupa LOTOS S.A. shall in no way relieve the Manufacturer/Supplier from the responsibility to meet the requirements of the purchase documents.

The records listed below shall be available for review by Grupa LOTOS S.A. representative at the time of inspection:

- Mill certificates. The test reports shall state the specification to which the material complies, the heat, lot or heat number, and the results of chemical analysis and mechanical tests.
- Certificates for bolting material
- Welding procedure specifications, procedure qualification records and welder qualification tests.
- Radiographic films of required radiographic test incl. the expert's assessment and records of the results of any required magnetic particle, fluid penetrant, kerosene test, or other method of examination.

- Dimensional examination protocol including measurement of horizontally assembled stack deflection
- Certificates for electrical parts (eg. Aircraft Warning Lights, its cables and junction box)

8.1 Design Check

It is the Manufacturer / Supplier responsibility that stack design, including calculations, shall be reviewed, verified and approved by licensed structural engineer in accordance with Polish Building Law.

The compliance of fired heater design with requirements of this specification and purchase order will be verified by Grupa LOTOS S.A.

8.2 Rejection

Equipment or parts thereof and materials entering therein, indicating irremediable or injurious defect, improper fabrication, excessive repairs, or they are not in accordance with the requirements of the relevant codes or Grupa LOTOS S.A. specifications shall be subject to rejection. They shall be subject to rejection at any time or place by Grupa LOTOS S.A. or Grupa LOTOS S.A. representative if such conditions are discovered after acceptance of the items at the supplier's shop.

9 Painting and Temporary Corrosion protection

All surfaces of structural steelwork including the exterior surface of air ducts and flue gas ducts shall be shop painted at Manufacturer/Supplier's shop in accordance with Grupa LOTOS S.A. specification No 1190. In duly justified cases structural steelwork may be painted at site. This shall be subject to prior Grupa LOTOS S.A. written approval.

The outside surface of stack and inside lined ducts shall be painted with paints having a maximum application temperature of at least 180 °C.

Plastic caps shall close all nozzles. Wooden plates shall protect flanges.

10 Documentation

The documentation shall be delivered in the quantity fixed in the specifications No 6400, 6500 and purchase order documents.

Manufacturer/Supplier shall deliver technical documentation that will cover all drawings, data sheets, operating manuals, manuals and description of components, electrical and instrument documents and brochures necessary for the operating, maintenance, repair and spare parts ordering.

For stack higher than 30 meters Supplier shall prepare stack card (passport) in accordance with PN-EN 1993-3-2.

11 Relevant documentation

Any "Technical Specification" issued by Grupa LOTOS S.A. listed in Contract Files.

12 Norms and standards

Codes and standards listed below form part of this specification. Each publication shall be the latest revision and addendum in effect at the Contract award, unless otherwise specified:

- PN-EN 13084 Free standing chimneys
- PN-B-03004 Kominy murowane i żelbetowe, obliczenia statyczne i projektowanie
- PN-EN 1993-3-2 Eurokod 3 - Design of steel structures. Towers, masts and chimneys. Chimneys
- PN-EN 1991-1-4 Eurokod 1 Actions on structures. General – Wind actions
- API 560 Fired heaters for general refinery service
- ICAO International Civil Aviation Organization – wymagania dotyczące oznakowania

13 Attachment

- Attachment No.1 Sampling nozzle
- Attachment No.2 Platform location on circular emitter (stack)
- Attachment No.3 Measuring nozzles lay-out for rectangular channel wall
- Attachment No.4 Sampling nozzle plug

14 Record of changes

No.	Date	Description	Introduced by
1	09-05-2011	Changed point 4 Added statement in point 6.2	S.Zajączkowski T. Wróbel
2	30-11-2013 (rev.2)	Review, update, standardize and changes to the Standard within scope of order No. OK/990/2012	Editorial board coordinated by T.Wróbel
-	31-08-2015	Page layout corrections, no contents changes.	T. Wróbel

Grupa LOTOS S.A.	**Attachment No. 1**	Spec. No
	Sampling nozzle	2120

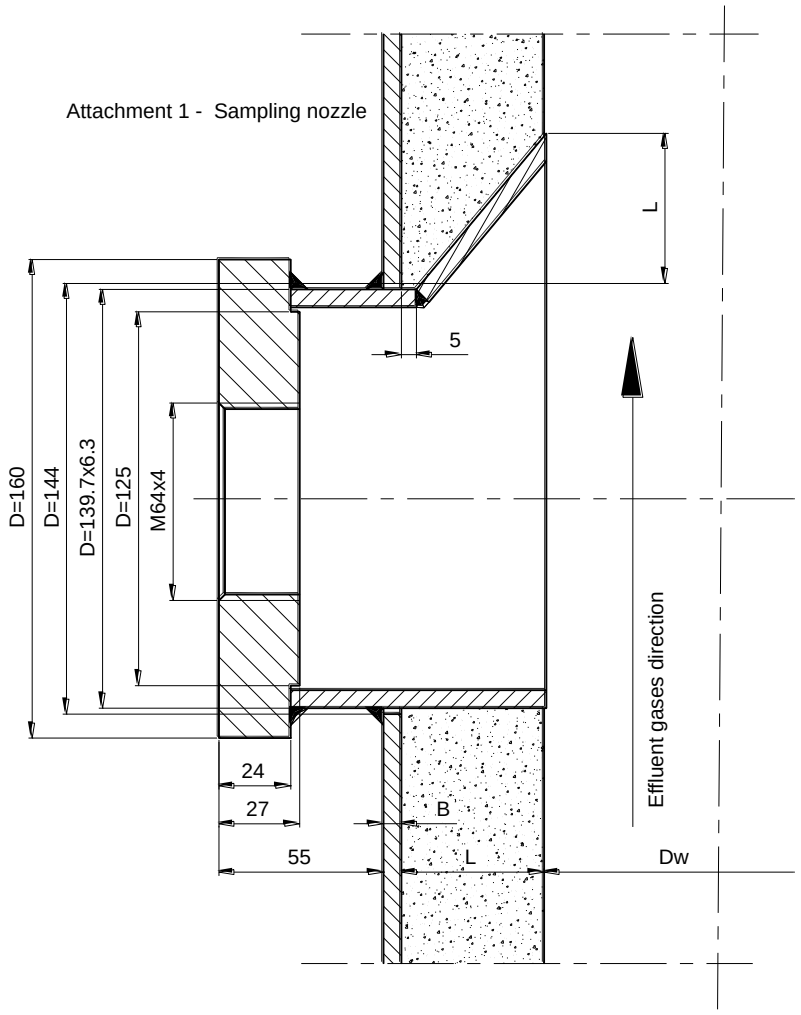

Dw - Stack/duckt internal diameter
B - Casing thickness
L - Lining thickness
Nozzle has to be made of stainless steel

Arch. No..	Area	Sub-area	Document number	Rev. No..	Issue date	Page	Pages
19259	**90**	**00**	**PR 30006**	**2**	**30.11.2013**	**1**	**1**

Grupa LOTOS S.A.	**Attachment No. 2**	Spec. No 2120
	Platform location on circular emitter (stack)	

Attachment 2
Platform location on circular emitter (stack)

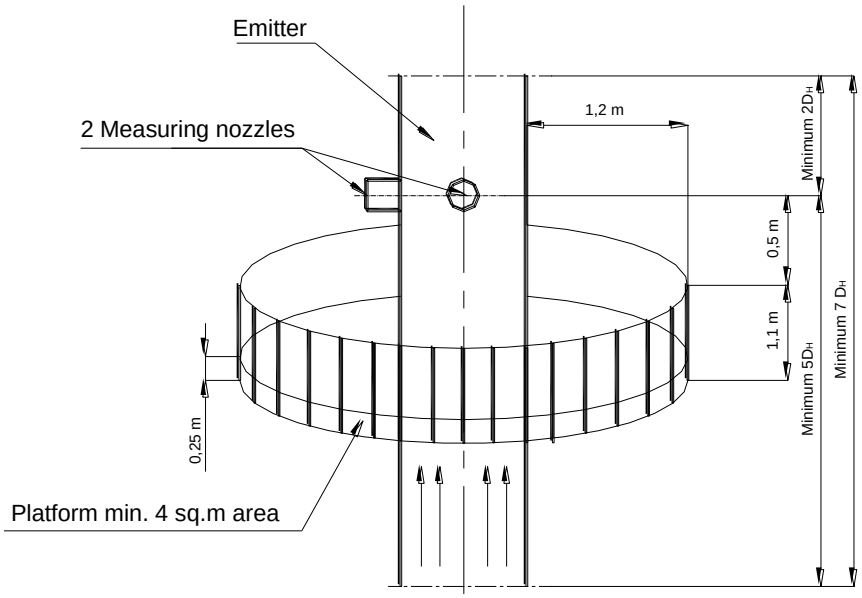

Measuring nozzles lay-out on circular emitters

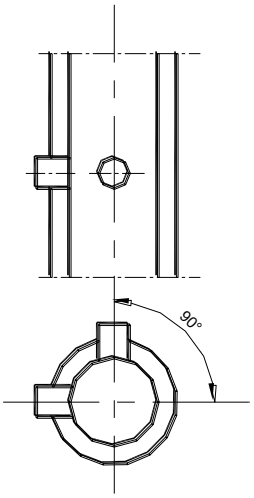

Arch. No..	Area	Sub-area	Document number	Rev. No..	Issue date	Page	Pages
19259	**90**	**00**	**PR 30006**	**2**	**30.11.2013**	**1**	**1**

Grupa LOTOS S.A.	**Attachment No. 3**	Spec. No 2120
	Measuring nozzles lay-out for rectangular channel wall	

Attachment 3
Measuring nozzles lay-out for rectangular channel wall

a - wysokość przewodu

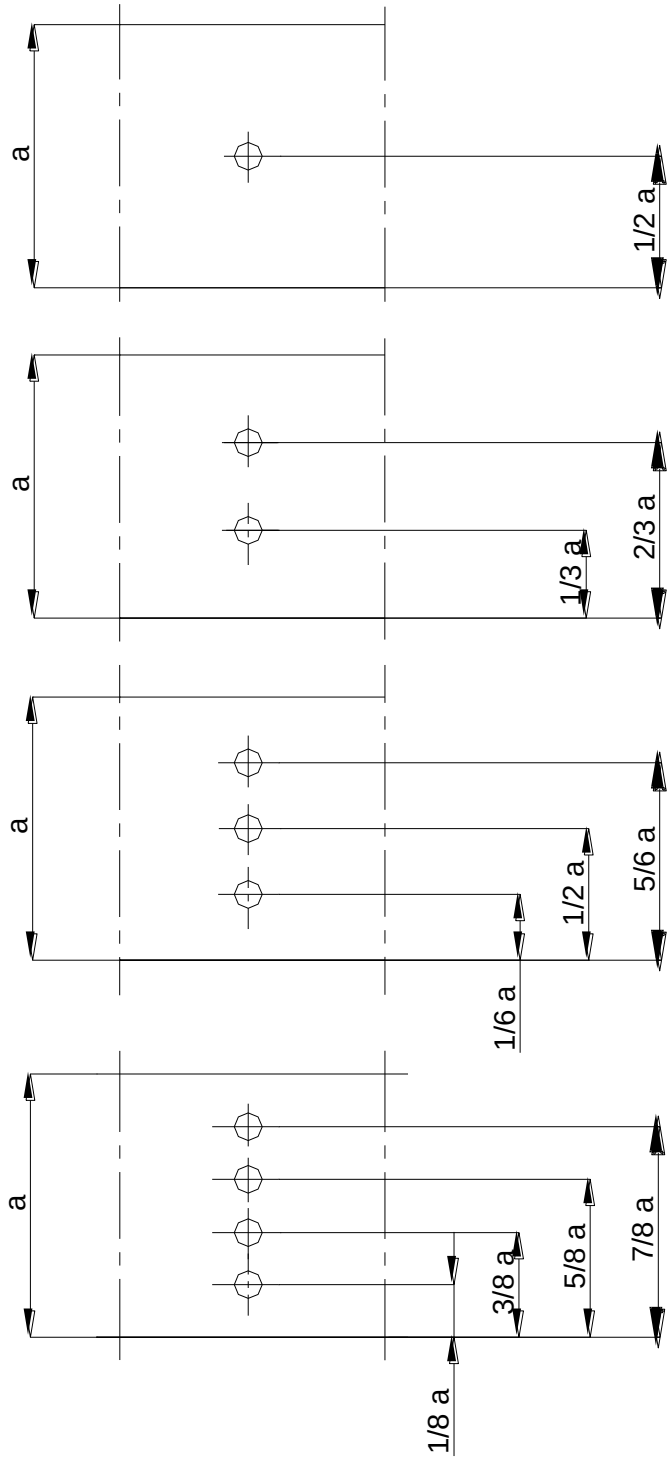

Arch. No..	Area	Sub-area	Document number	Rev. No..	Issue date	Page	Pages
19259	**90**	**00**	**PR 30006**	**2**	**30.11.2013**	**1**	**1**

Grupa LOTOS S.A.	**Attachment No. 4**	Spec. No
	Sampling nozzle plug	2120

Attachment 4 - Sampling nozzle plug

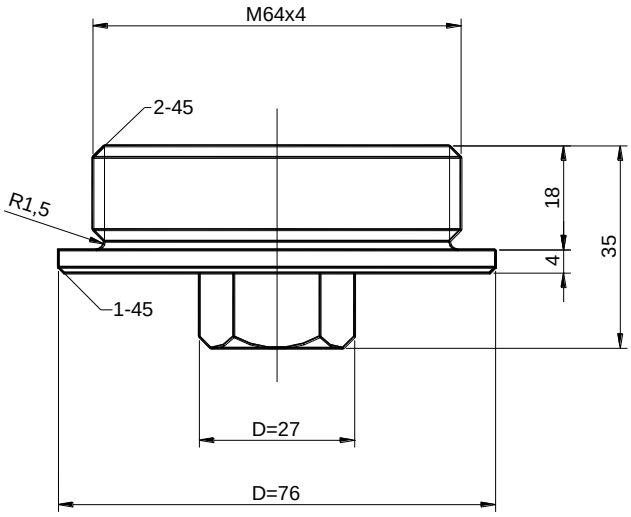

Arch. No..	Area	Sub-area	Document number	Rev. No..	Issue date	Page	Pages
19259	**90**	**00**	**PR 30006**	**2**	**30.11.2013**	**1**	**1**